GDP 기어 척

Gear Chuck

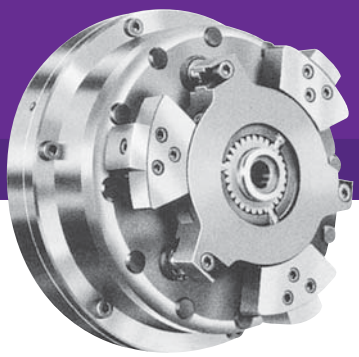

- Diaphragm chuck for hard turning/ grinding gears
- Fast jaw and clamping cage change for easy setup

SPECIAL CHUCK

- DP 척을 기본으로 기어의 선삭 연삭 공정에 이상적
- 빠르게 죠 교환 가능

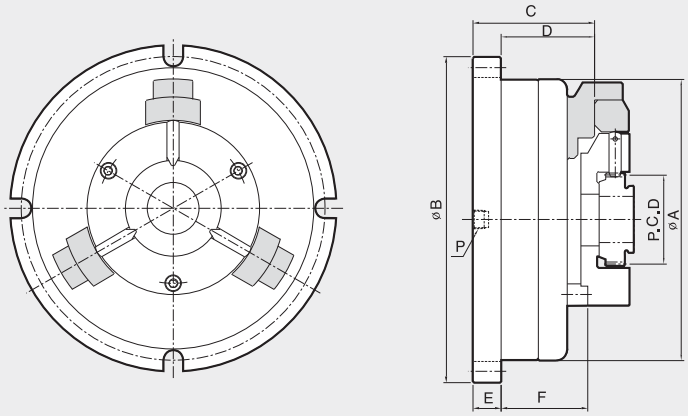

Dimensions / 치수표

	A	B	C	D	E	F	P
GDP-08	212.9	246	96.8	77.7	19.1	70	1/4
GDP-10	251.0	284	96.8	77.7	19.1	85	1/4
GDP-13	327.2	360	108	88.9	19.1	85	1/4
GOP-17	428.9	476	109.5	90.4	19.1	85	1/4

Specifications / 사양

	Clamping Force(kgf) P=3.5Kg/cm²	No. of Jaw	Jaw Stroke (mm)	Chucking Diameter (mm)	Max rpm (r.p.m.)	Pressure (kgf/cm²)	Weight (kg)
GDP-08	720	3	0.25	40~70	4000	4.5	20
GDP-10	1150	3	0.25	70~100	3500	4.5	26.5
GDP-13	2000	3	0.35	100~160	3000	4.5	43
GOP-17	3600	3	0.40	160~250	2000	4.5	89